REVISIONS				
ZONE	REV	DESCRIPTION	DATE	APPROVED
B4	B	C'BORE DEPTH CHANGED	07.10.17	KH

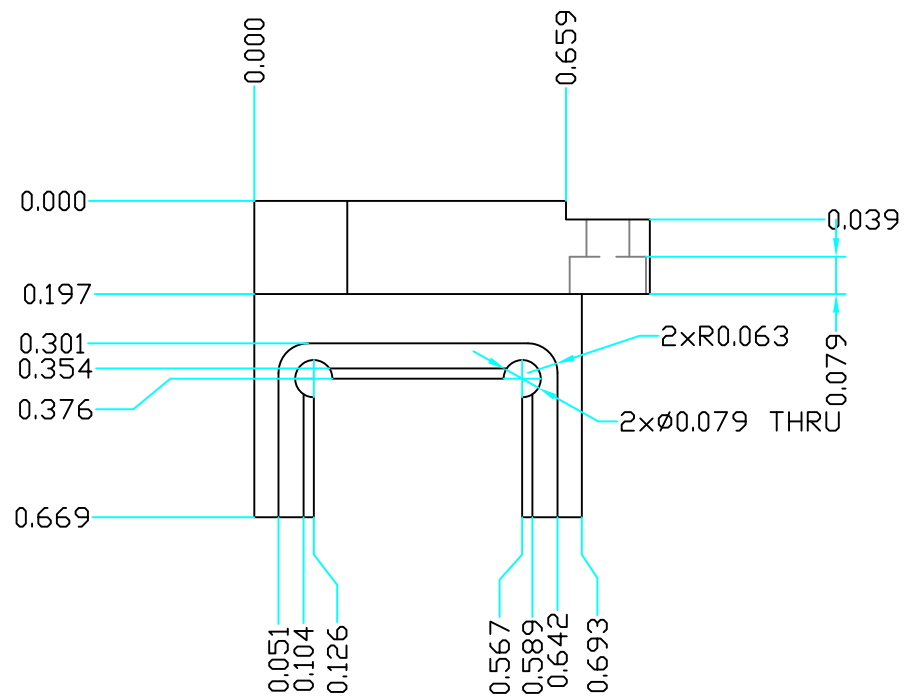

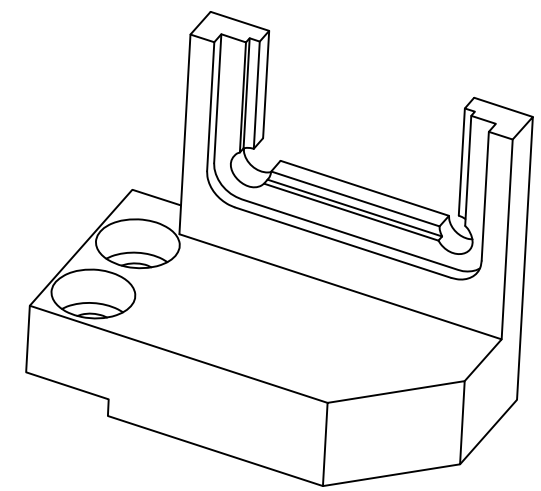

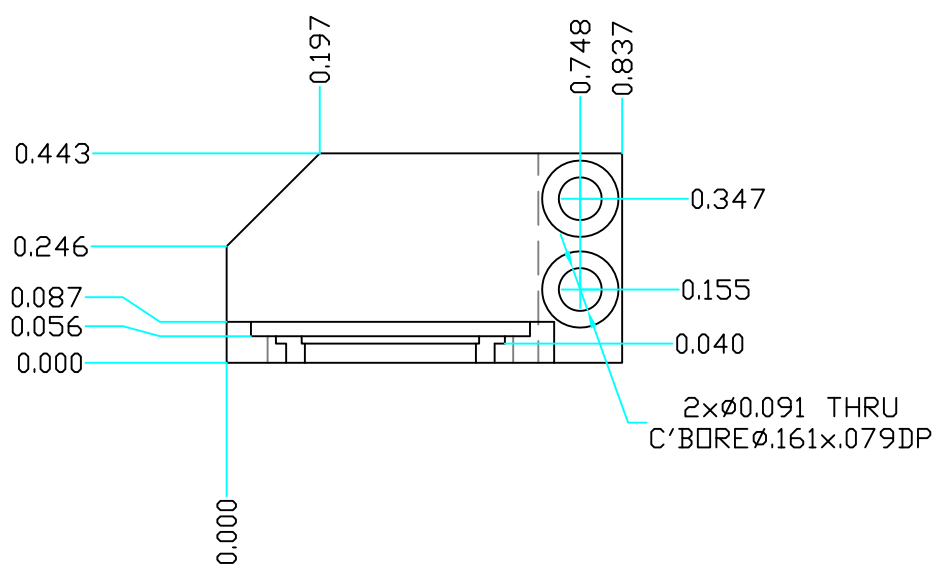

NOTES:
1. DO NOT SANDBLAST
2. MASK ALL THREADS BEFORE PLATING

FIND/REF.#	QTY.	U.M.	PART NAME	MATERIAL	PART DESCRIPTION	REF. SHEET/DWG.
1	1	EA	FRAME	ALUMINUM 6061	BLACK ANODIZED	200.00.02.00

PARTS LIST

UNLESS OTHERWISE SPECIFIED:

1. DIMENSIONS ARE IN INCHES.
2. MACHINE SURFACES TO BE FLAT, SQUARE, PARALLEL & CONCENTRIC WITHIN .001 FOR 5 INCHES OR .001 TIR AS APPLICABLE.
3. MARK ALL DETAILS (EXEMPT COMMERCIAL PARTS) WITH DWG. & ITEM NUMBER.
4. BREAK ALL SHARP CORNERS .01 x 45° CHAMFER.
5. FILLETS SHOWN SHARP = .04 RAD.
6. TAPPED HOLES: UNIFIED CLASS 2B THREAD, MIN DEPTH 1.5 x DIA.
7. C'SINK BORED & REAMED HOLES 1/16 x 45°.
8. CENTERS PERMISSIBLE.
9. DO NOT SCALE DRAWING.
10. ALL WELDING TO CONFORM TO LATEST A.W.S. STANDARDS

PERMISSIBLE VARIATION IN INCH DIMENSIONS WITHOUT TOLERANCES

FABRICATION TOLERANCES		MACHINING TOLERANCES			
BELOW 12	±0.10	DECIMAL PLACES	X & X.X	X.XX	X.XXX
12 TO 60	±0.13	BELOW 18	±0.010	±0.005	±0.002
60 TO 180	±0.20	18 TO 48	±0.020	±0.010	±0.004
OVER 180	±0.30	OVER 48	±0.030	±0.015	±0.010
ANGLE TOLERANCE ±0.5°		ANGLE TOLERANCE ±0.1°			

SURFACE TEXTURE 63

TOLERANCES ARE NOT ACCUMULATIVE

NEXT ASSY	QTY	DRAWING INFORMATION	NAME	DATE
		DRAWN	AD	05.25.17
		CHECKED	KH	
		APPROVED	KH	

OSI

Open Source Instruments Inc.

TITLE
H-BCAM BLACK
FRAME CCD

SIZE D | SCALE 2:1

PROJECT NUMBER 300

DRAWING NUMBER 300.00.02.01

SHEET 1 OF 1 | REVISION B